WASHING-MACHINE TAPS

# WASHING-MACHINE TAP

4080

- Washing machine tap
- Male/Male thread ISO 228
- Temperature range min 0°C – max +80°C

Tap suitable for distributing, regulating and interrupting fluids that are generally non-corrosive, compatibly with the valve materials. Plumbing and heating systems are the ideal field of application, where it is used as shut-off tap before other appliances such as washing machines or dishwashers.
The seat tightness is guaranteed by a NBR gasket.

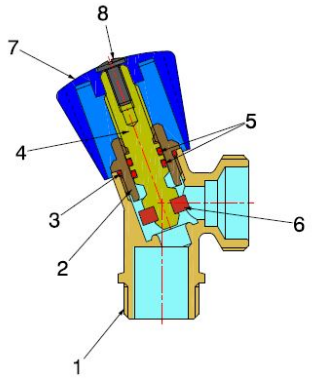


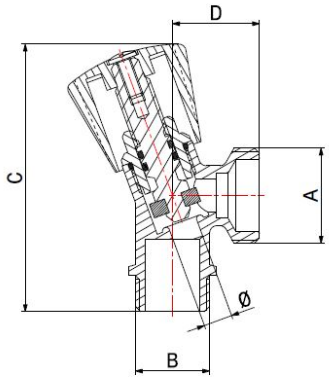


## COMPONENTS

| POS. | PART NAME | N° | MATERIAL |
|---|---|---|---|
| 1 | Upper part body | 1 | CW617N UNI-EN 12165 chrome-plated |
| 2 | End connection | 1 | CW617N UNI-EN 12164 |
| 3 | O-Ring | 1 | NBR |
| 4 | Upper part stem | 1 | CW617N UNI-EN 12164 |
| 5 | O-Ring | 2 | NBR |
| 6 | Gasket | 1 | NBR |
| 7 | Handle | 1 | ABS chrome-plated |
| 8 | Screw | 1 | CW508L UNI-EN 12166 nickel-plated |

## DIMENSIONS

| A | B | C | D | Ø | PN |
|---|---|---|---|---|---|
| 3/4" | 1/2" | 74 | 24 | 8 | 10 |

## PACKAGING

| | 3/4" |
|---|---|
| **CODE** | **40800006** |
| PCS BOX | 1 |
| PCS CARTON | 150 |